6V_5214U_65_HTV_AP_v0.3_20210714

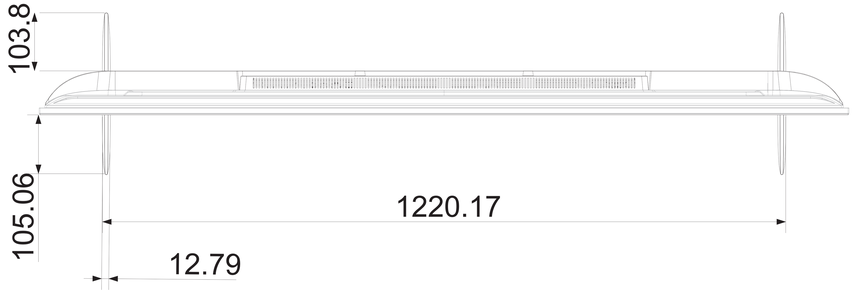

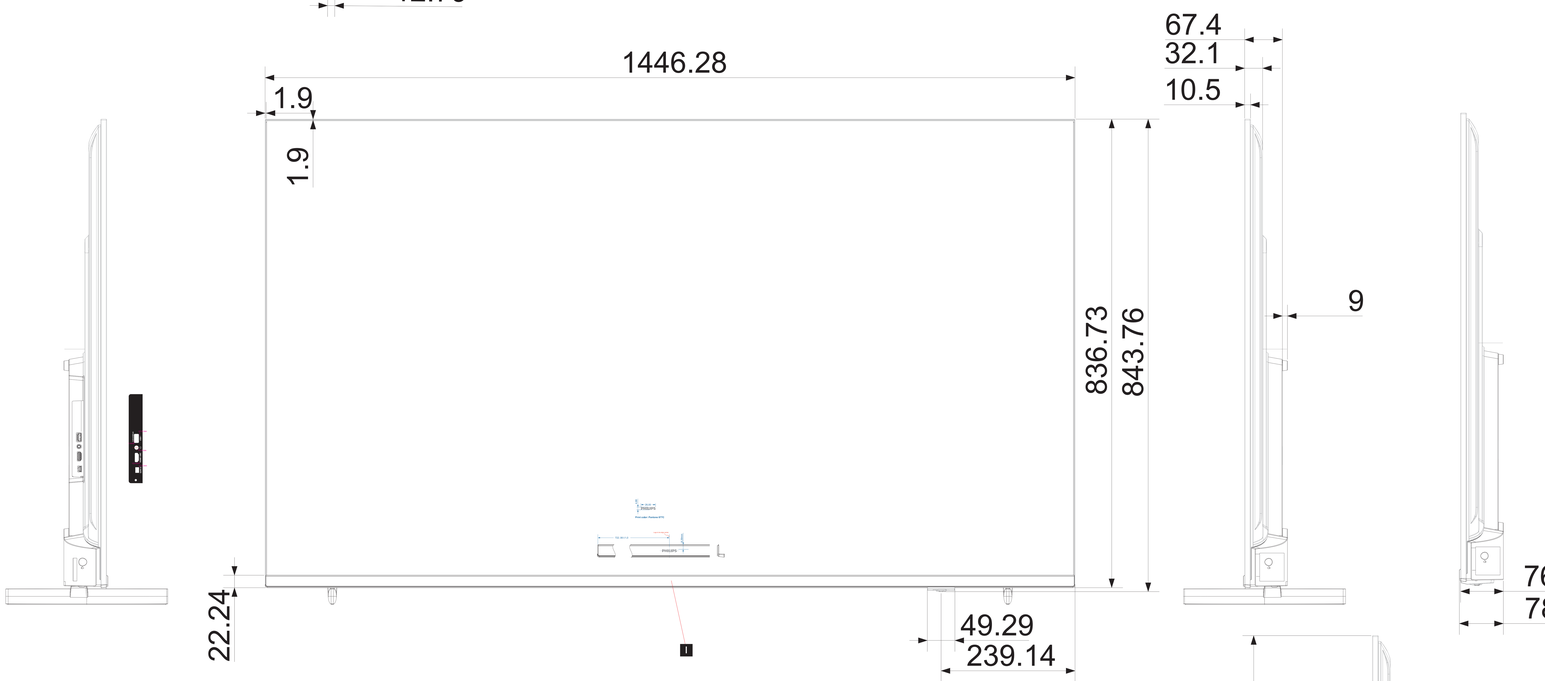

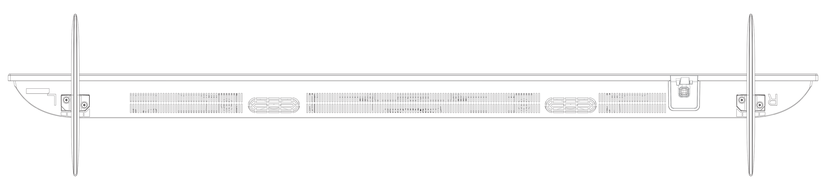

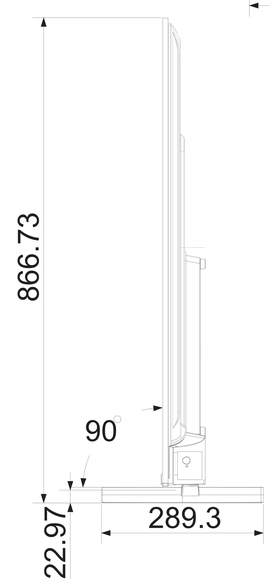

PART		COLOUR	TECHNIQUE	CHANGES / REMARKS	V
I	PHILIPS LOGO	PANTONE 877C	SILKSCREEN PRINTING	ON HIGH GLOSS SURFACE	00
J	STICKER AREA		INMOLDED	ON POLISHED SURFACE	00
K	ALL TEXTS,ICON AND CAUTION LABELS		ENGRAVED	ENGRAVED 0.3 (DEPTH 0.3 MM)	00

LABEL DOWN IO TEXT FONTS: CentraleSansCnd Bold 10pt

LABEL SIDE IO TEXT FONTS: CentraleSansCnd Bold 10pt

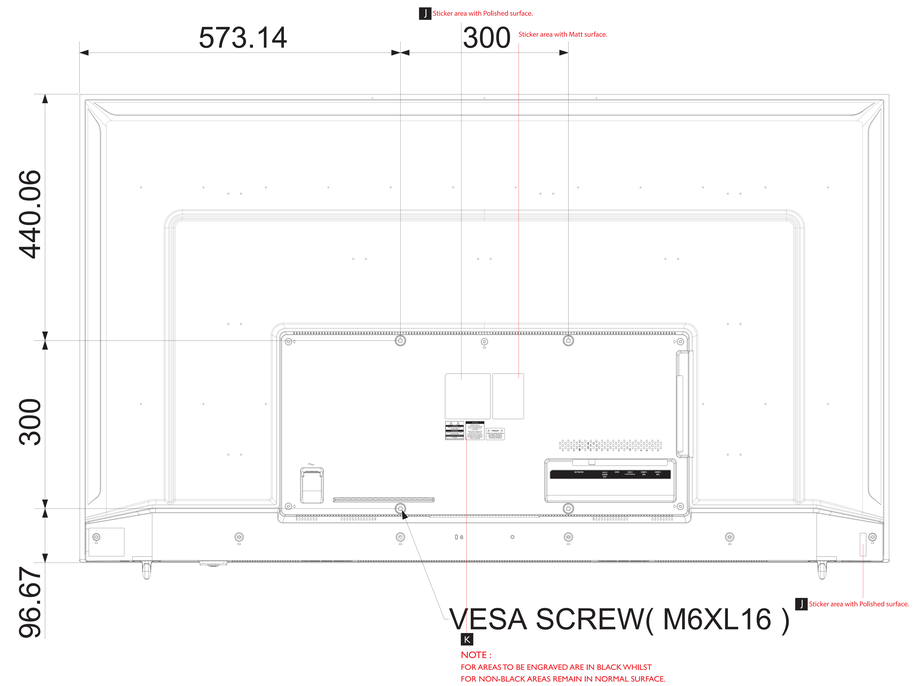

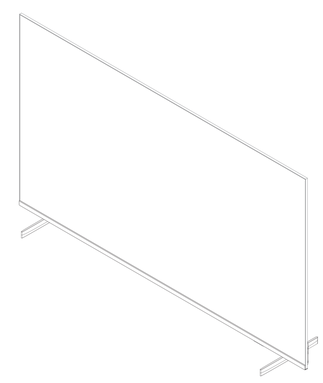

比例 0.500

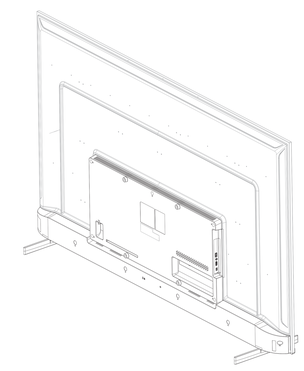

比例 0.500